© 2021 TE Connectivity. All Rights Reserved.

REVISIONS					
P	LTR	DESCRIPTION	DATE	DWN	APVD
	A	INITIAL RELEASE	12MAY2022	SD	MM

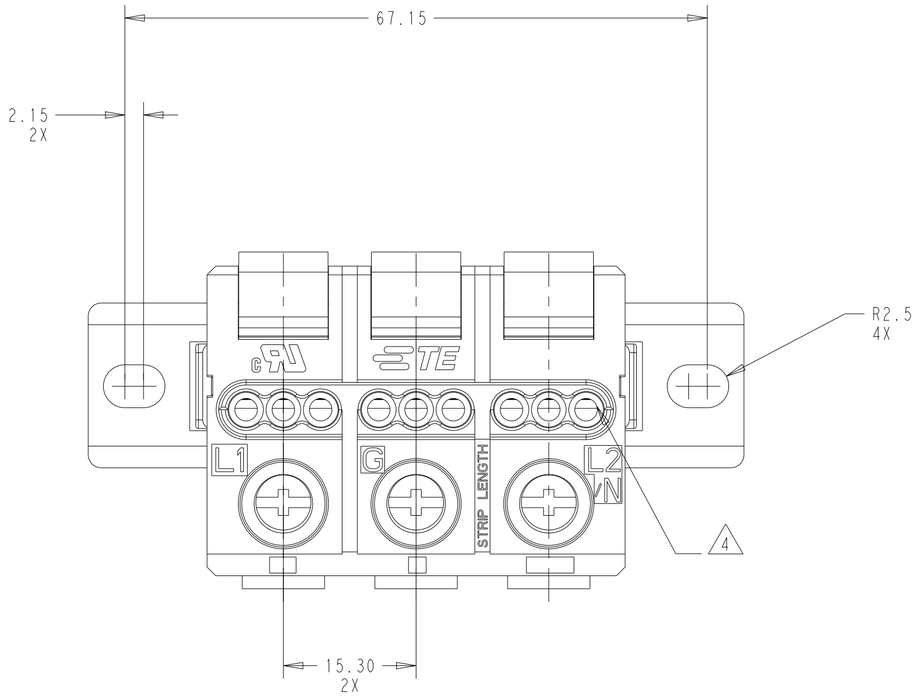

NOTES:

1. MATERIALS AND FINISH:
   - HOUSING, LEVER, COVER: PBT
   - SPRING CONTACT: STAINLESS STEEL
   - CONTACTS: COPPER ALLOY, TIN PLATED
   - SCREW: STEEL, ZINC PLATED
2. MUST COMPLY WITH DIRECTIVE 2002/95/EC (ROHS)
3. THIS PRODUCT HAS NOT COMPLETED VALIDATION TESTING
4. SOLID AND STRANDED WIRE ONLY: 12-18AWG
   MAX INSULATION OD: ∅4.2
   STRIP LENGTH: 13.00±0.50
5. SOLID AND STRANDED WIRE ONLY: 6-14AWG
   MAX INSULATION OD: ∅6.0
   STRIP LENGTH: 13.00±0.50
6. COMBINATION SLOTTED PHILIPS SCREW. TORQUE 0.8-1.2 N-m.

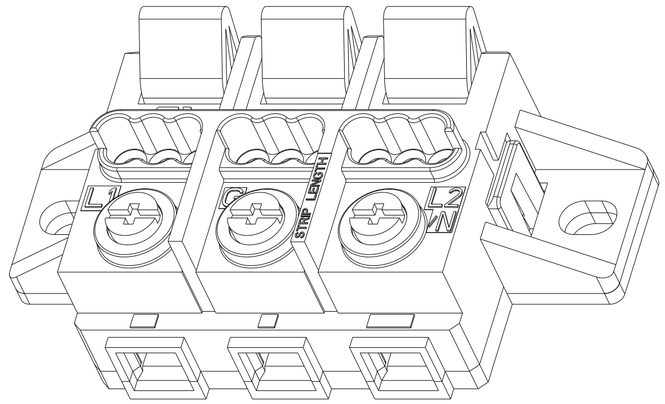

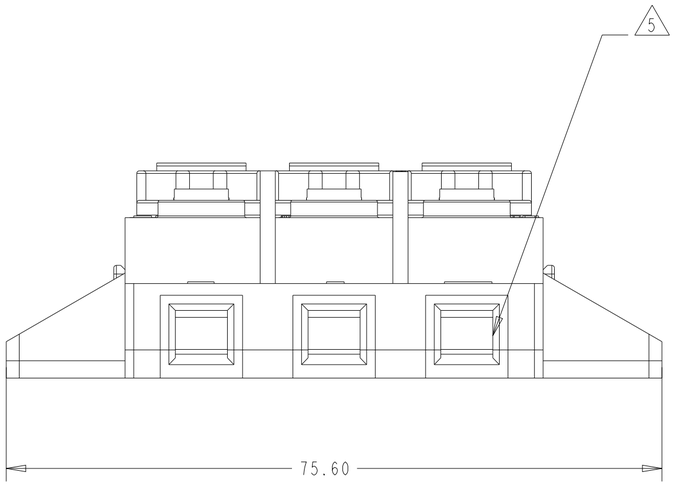

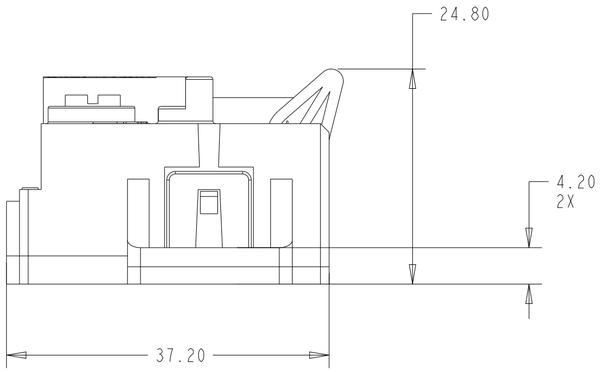

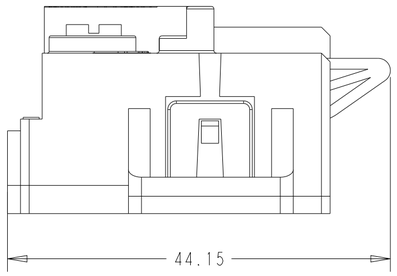

VIEW WITH LEVER FULLY OPENED

PART NO.	2382635-1

THIS DRAWING IS A CONTROLLED DOCUMENT.	DWN J. LATORRE 04FEB2021	TE Connectivity	
	CHK M. MOSTOLLER 04FEB2021		
DIMENSIONS: mm	APVD -	NAME LUMAWISE TB POWER INPUT TERMINAL BLOCK	
TOLERANCES UNLESS OTHERWISE SPECIFIED: 0 PLC ±- 1 PLC ±0.2 2 PLC ±0.13 3 PLC ±- 4 PLC ±- ANGLES ±-	PRODUCT SPEC 108-160129		
	APPLICATION SPEC 114-160073	SIZE A2 / CAGE CODE 00779 / DRAWING NO C-2382635	RESTRICTED TO -
MATERIAL 1 / FINISH 1	WEIGHT -		
	CUSTOMER DRAWING	SCALE 2:1 / SHEET 1 OF 1	REV A

Mouser Electronics

Authorized Distributor

Click to View Pricing, Inventory, Delivery & Lifecycle Information:

TE Connectivity:
2382635-1